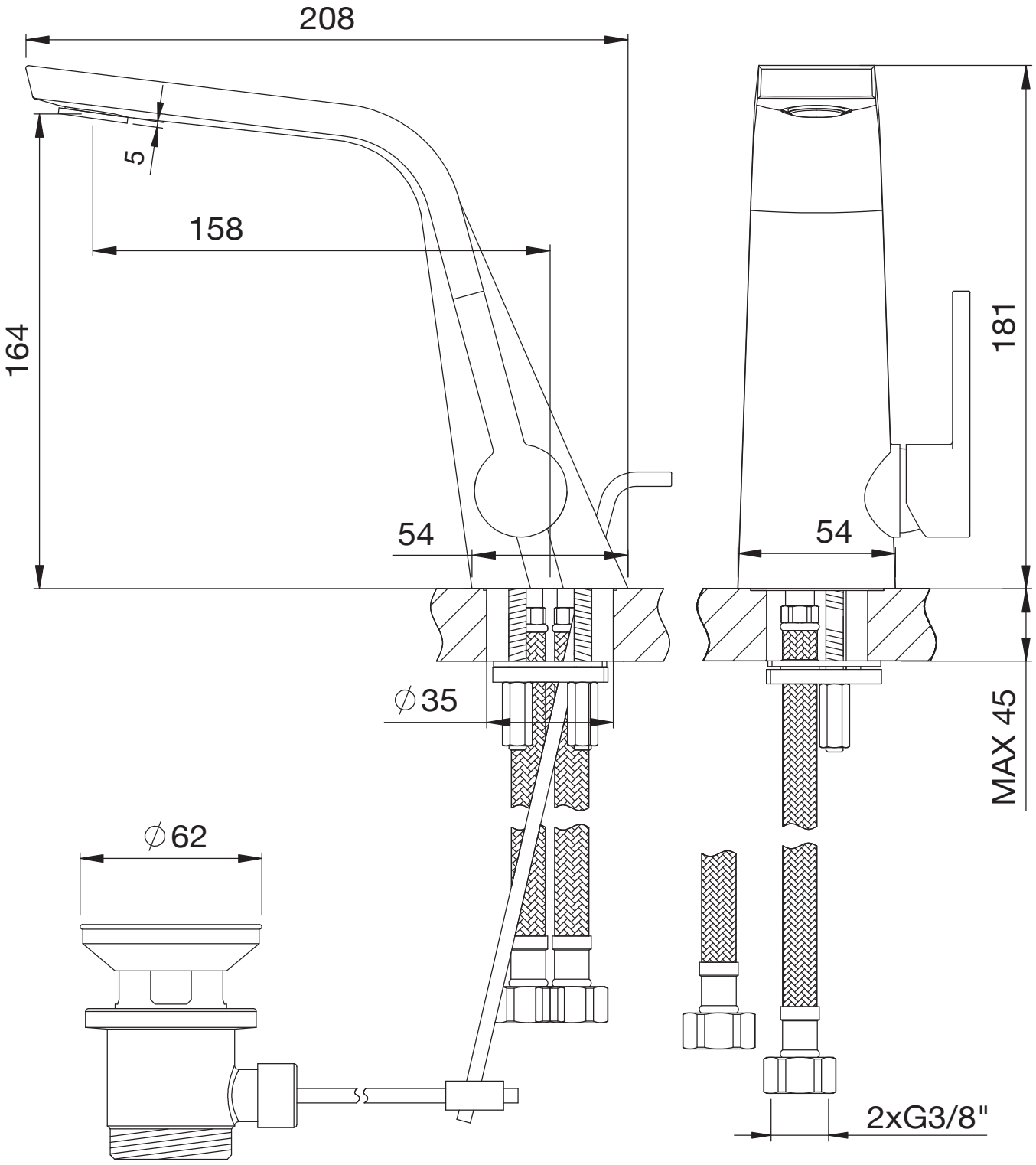

260 1000 S

STEINBERG